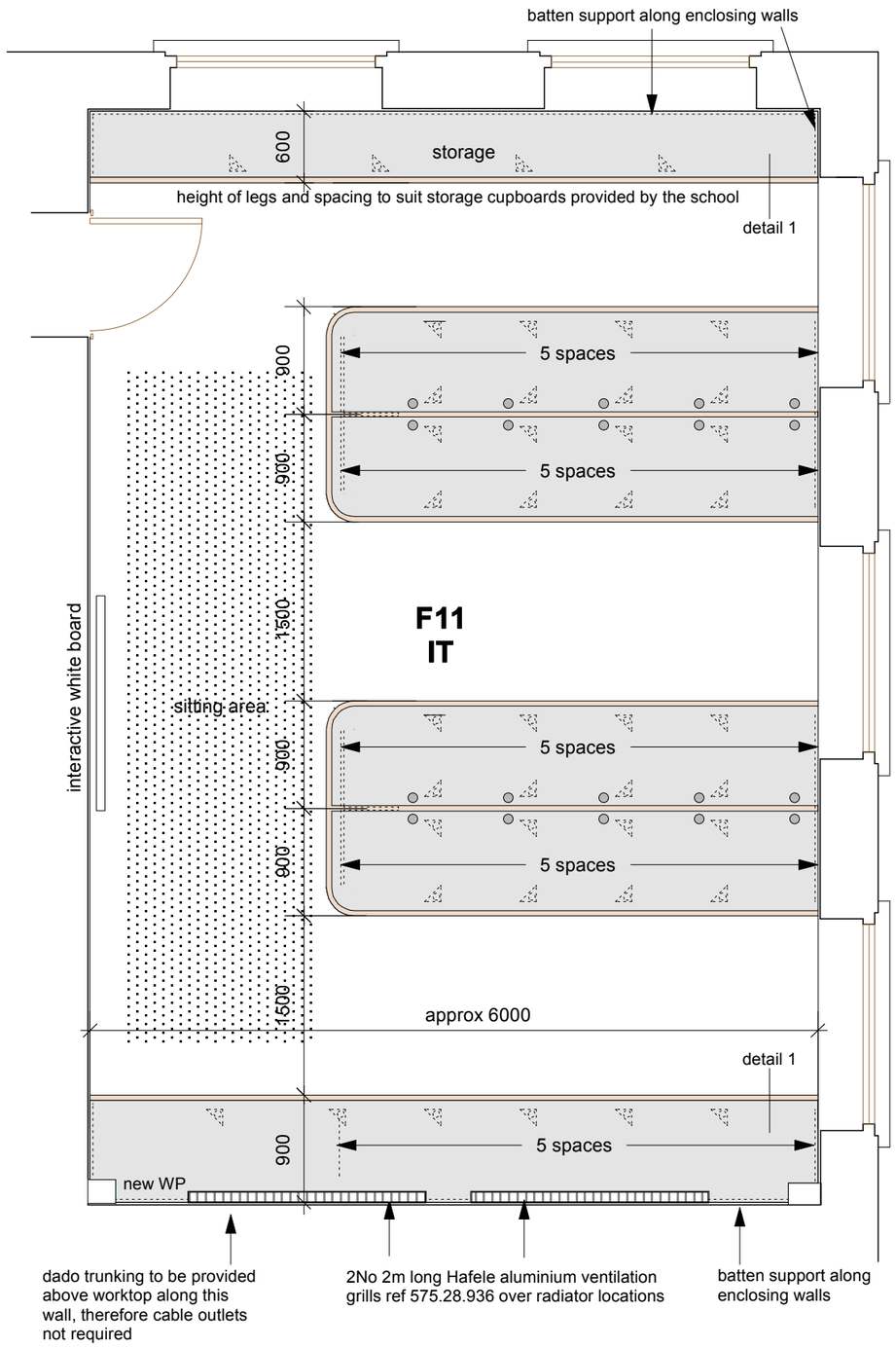

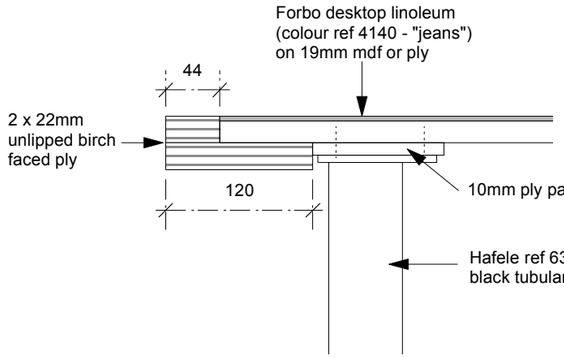

DETAIL 1

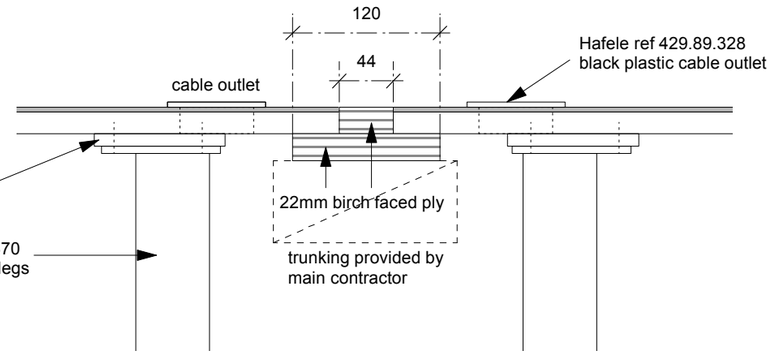

DETAIL 2

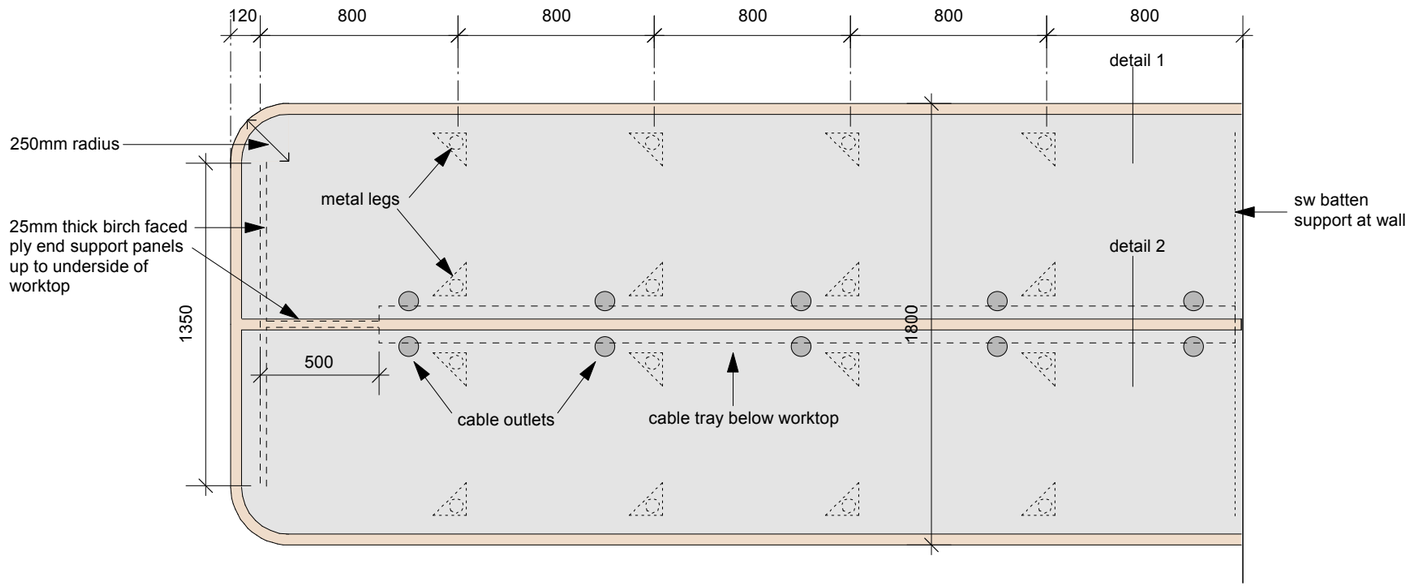

PLAN

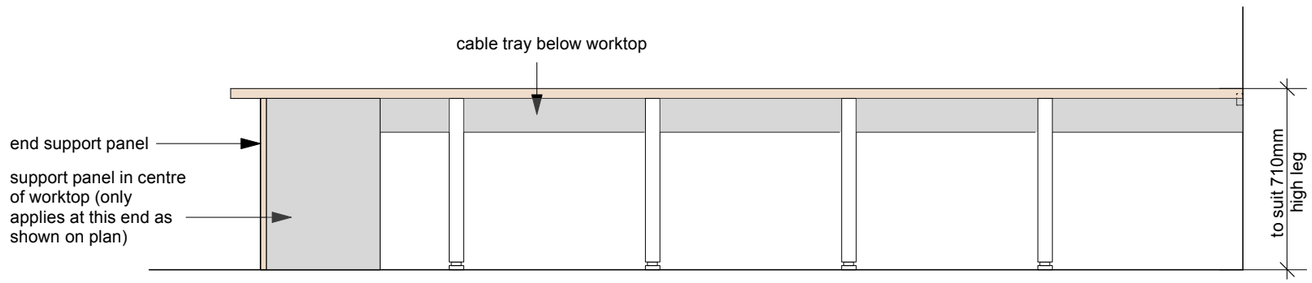

ELEVATION

project5 ARCHITECTURE

PROJECT 5
ARCHITECTURE LLP
2A High Street, Barley
Royston, Herts SG8 8HZ

T: +44 (0)1763 848 428
F: +44 (0)1763 849 072
E: info@p5a.co.uk

job title	scale	drawn	drawing no.
LAYCOCK PRIMARY SCHOOL	1:50 @ A3	MP	LS2-IT-01
drawing	date	checked	
FURNITURE FOR IT ROOM	NOV 09	XX	