DESIGN INTENT

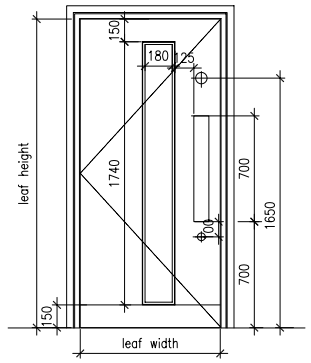

TYPE A

Single timber door with vision panel

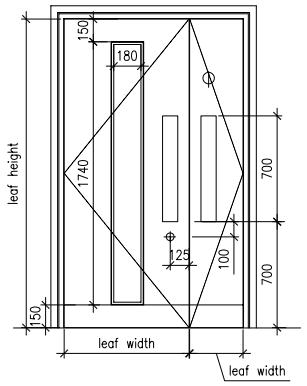

TYPE B

1.5 timber door with vision panel

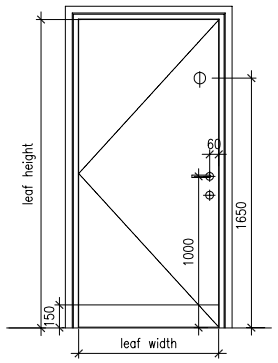

TYPE C

Single solid timber door

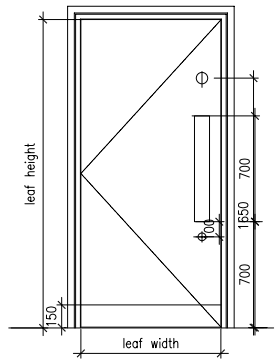

TYPE D

Single solid timber door

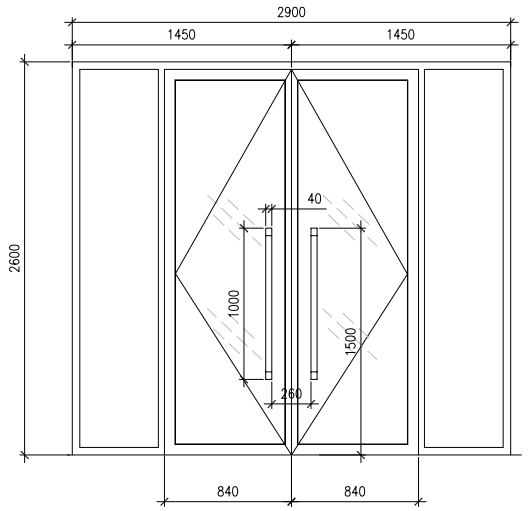

TYPE E

Double firerated glazed door - lift lobby
Provision for concealed mag lock in door head.

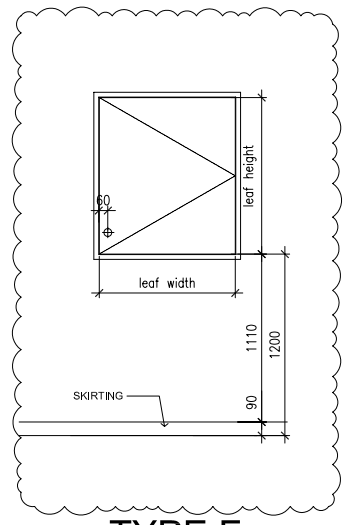

TYPE F

Aluminium louvered panel

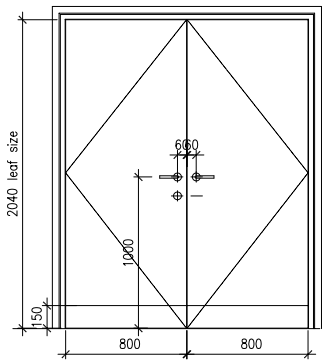

TYPE G

External double timber doors as per others with 3mm aluminum plate bounded to external face of door

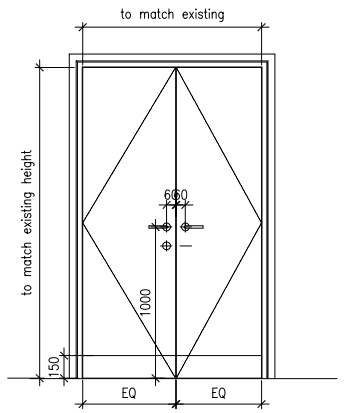

TYPE H

External double timber doors as per others with 3mm aluminum plate bounded to external face of door

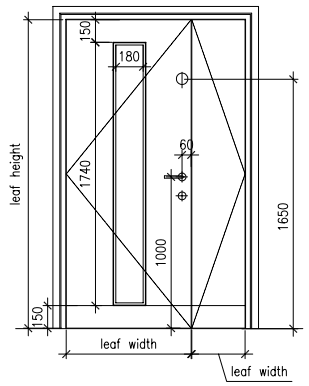

TYPE J

External 1.5 leaf timber door as per others with 3mm aluminum plate bounded to external face of door with vision panel

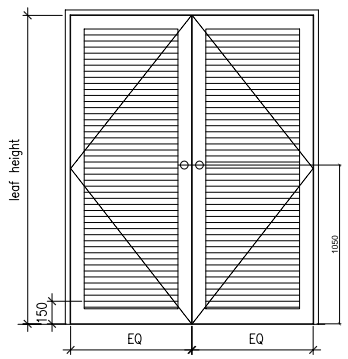

TYPE K

External aluminium louvered door

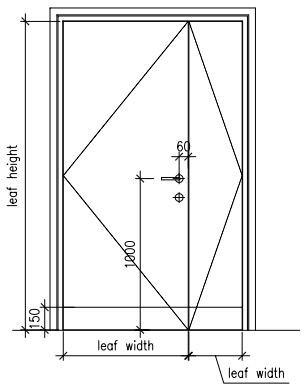

TYPE L

External 1.5 leaf timber door as per others with 3mm aluminum plate bounded to external face of door

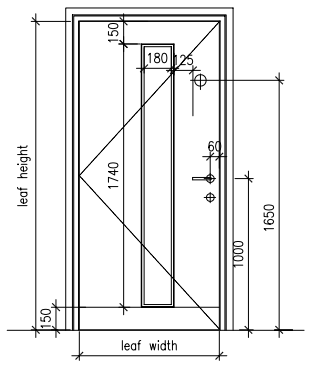

TYPE M

External 1.5 leaf timber door as per others with 3mm aluminum plate bounded to external face of door

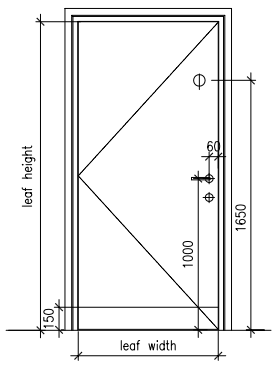

TYPE N

External single timber door as per others with 3mm aluminum plate bounded to external face of door

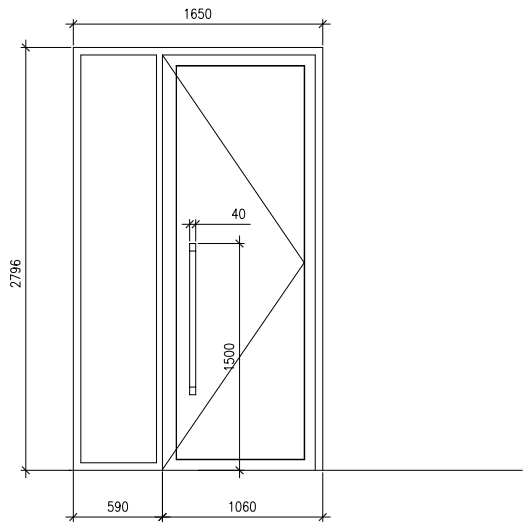

TYPE P

Double firerated glazed door - lift lobby
Provision for concealed mag lock in door head.

Rev	Notes	dd.mm.yyyy	By	Issue
B	Door type F revised. Note revised.	24.06.2008	ap	mp
A	Issued for construction	01.05.2008	ap	mp
/	Issued for tender	22.10.2007	ap	mp

FOR CONSTRUCTION

Do not scale from this drawing. Check all dimensions and areas on site

darling associates

Greencoat House 15 Francis Street London SW1P 1DH
t: 020 7630 0500 f: 020 7630 9059 e: mail@darlingassociates.net

Project:

- 210 Pentonville Road
- London

Title:

- Door elevations
- Offices

Project No:	Drawing No:	Revision:
6007	(32)01	B

Scale: 1/25 @ A1 1/50 @ A3 CAD File No: K:/6007/Current/tend/(32)

Date: 2006.10.11 Drawn: AP Issue: MP

The design is the copyright of darling associates